Renaissance FP Price List USA - BDI - July 6th, 2026 - Tariffs included in the prices

Contents

EF-RUP600 2
EF-RL50 4
EF-RR1000C 6
EF-RR1500C 8
Options 10
Summary 12

Uptown 600 Fireplace

Magnificent 600in2 view of the fire

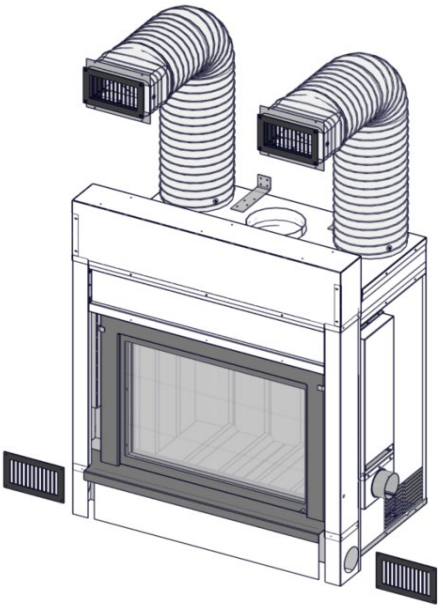

Requires a choice of trim

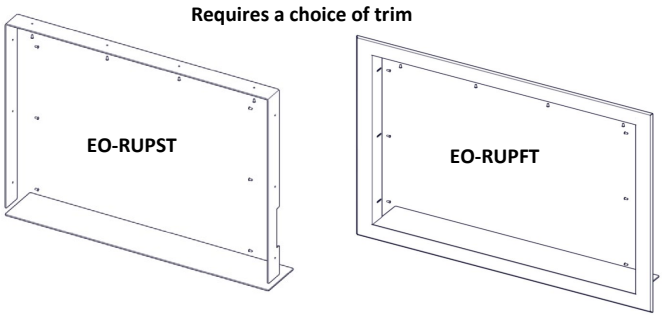

TECHNICAL SPECIFICATIONS

Emissions:	EPA Phase 2 Qualified at 4.8 grams/kg of wood burned EPA Qualified as per test protocol ASTM 2558 “Standard test method for determining particulate matter emissions from fires in low mass wood-burning fireplaces”. The Uptown 600 can be sold in Canada and the USA since it is not regulated as per the rule definition of “fireplace” under Subpart AAA of the 2015 EPA Standards of Performance for New Residential Wood Heaters Vol. 80, No. 50.
Size of Firebox:	28 1/2″W x 13″D
HRS (Heat Recovery System)	Included with fireplace
Maximum Log Size:	24"
Door & Screen	Guillotine Glide-Rail System
Glass Viewing Area:	28 1/2″ W x 20 3/8″ H
Venting:	8″ EXCEL (12′ minimum, refer to manual if offsets are present)
Gas Log Provision	Yes (50,000 BTU max)
Shipping Weight:	705 pounds

Uptown 600 Fireplace Price List - Tariffs included in the prices

PRODUCT CODE	DESCRIPTION	SUGGESTED RETAIL
EF-RUP600	Includes a guillotine door, guilltine firescreen, refractory brick lining, HRS circulating air ducts and grills. Certified exclusively with 8" EXCEL Chimney, EXCEL Chimney pricing not included on this list. Requires one choice of trim.	**8,675.00**
REQUIRES 1 CHOICE OF TRIM		
EO-RUPST	Straight Trim (for heavier masonry)	**351.00**
EO-RUPFT	Frame Trim (for tile or cement board finish)	**526.00**
	OPTIONS (see options page for detailed descriptions)	
HEAT RECOVERY SYSTEM (HRS)		
FO-DUCT5	8" HRS Duct Extension - 5 Feet	**163.00**
GRILL OPTIONS		
EO-08LLG-IN	Long Linear Intake Grill	**351.00**
EO-08LLG-OUT	Long Linear Outlet Grill	**263.00**
UPTOWN 600 IS APPROVED FOR MASONRY CHIMNEY INSTALLATIONS		
FO-FDM8	Masonry Chimney Adapter	**154.00**
CHIMNEY		
SEE EXCEL CHIMNEY PRICE LIST		

Linear 50 Fireplace

Contemporary Wood Burning at its Finest

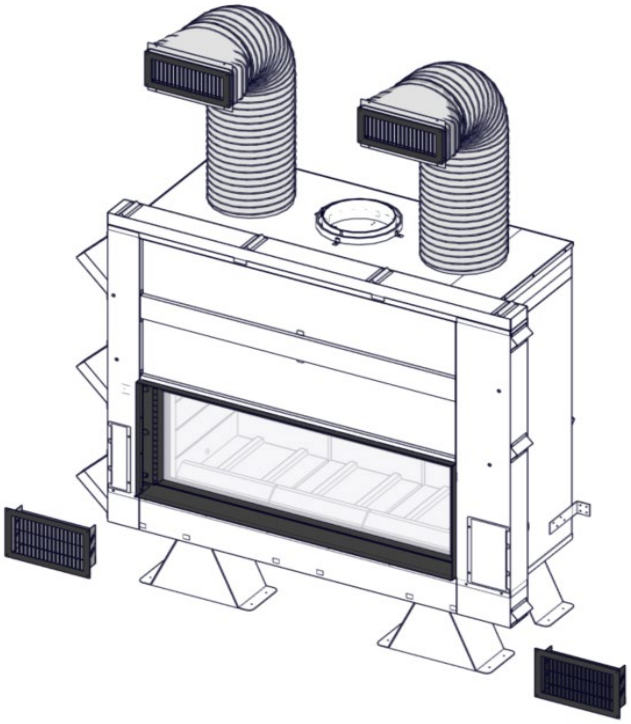

TECHNICAL SPECIFICATIONS

EPA Emissions:	Not tested to ASTM 2558 The Linear 50 can be sold in Canada and the USA since it is not regulated as per the rule definition of “fireplace” under Subpart AAA of the 2015 EPA Standards of Performance for New Residential Wood Heaters Vol. 80, No. 50.
Size of Firebox:	44 1/2″W x 14″D
HRS (Heat Recovery System)	Two 13 1/2″ x 8 3/8″ inlet wall grills (included) & Two 13 1/2″ x 6″ outlet wall grills (included)
Maximum Log Size:	24"
Door & Screen	Counterweighted Guillotine System
Glass Viewing Area:	45 7/8″W x 15 3/8″H
Venting:	10" RIS (12′ minimum height, refer to manual if offsets are present)
Gas Log Provision	Yes
Shipping Weight:	1,130 pounds

Linear 50 Fireplace Price List - Tariffs included in the prices

PRODUCT CODE	DESCRIPTION	SUGGESTED RETAIL
EF-RL50	Includes a guillotine-style ceramic glass door, guillotine firescreen, refractory brick lining, HRS circulating air ducts and grills. Certified exclusively with 10" RIS Chimney	**12,200.00**

OPTIONS (see options page for detailed descriptions)

HEAT RECOVERY SYSTEM (HRS)		
EO-DUCT	10" HRS Duct Extension - 5 Feet	**272.00**
GRILL OPTIONS		
EO-LLG-IN	Long Linear Intake Grill	**369.00**
EO-LLG-OUT	Long Linear Outlet Grill	**281.00**
EO-SG	Square Grills for 8' Ceiling	**272.00**
CHIMNEY		
SEE RIS PRICE LIST FOR 10"		

Rumford 1000C Fireplace

Fire Unlike any Other :

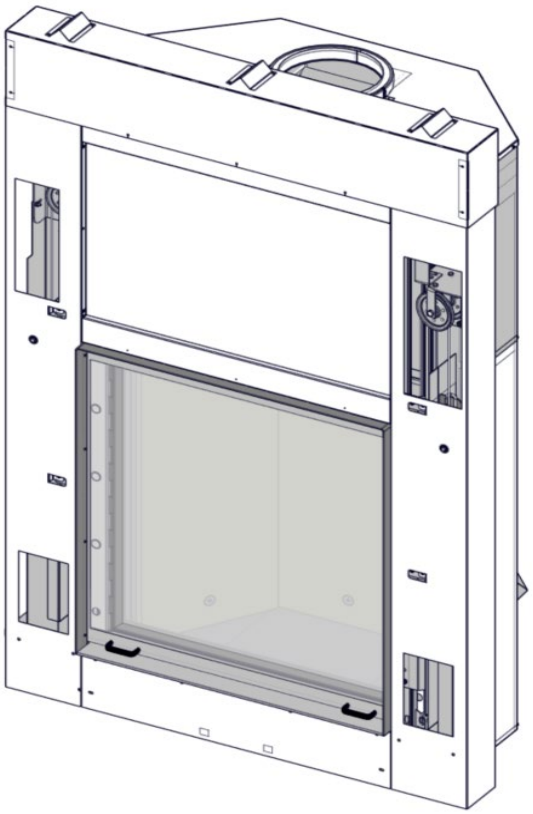

TECHNICAL SPECIFICATIONS

Emissions:	EPA Phase 2 Qualified at 3.0 grams/kg of wood burned EPA Qualified as per test protocol ASTM 2558 “Standard test method for determining particulate matter emissions from fires in low mass wood-burning fireplaces”. The Rumford 1000 can be sold in Canada and the USA since it is not regulated as per the rule definition of “fireplace” under Subpart AAA of the 2015 EPA Standards of Performance for New Residential Wood Heaters Vol. 80, No. 50.
Size of Firebox:	27 1/2"W front 13 1/2"W back 12 3/4" deep
Maximum Log Size:	The shape of the Rumford firebox is not square, therefore depending upon where and how you place your logs, different sized pieces may fit. Laid flat, 20″ logs will fit nicely at the front of the firebox, but only 13″ logs will fit at the back. Most people stack the logs upright against the back of the firebox.
Door & Screen	Counterweighted Guillotine System
Glass Viewing Area:	29 1/2"W x 31 1/2"H
Venting:	Certified exclusively with 10" RIS Chimney. (12′ minimum, refer to manual if offsets are present)
Gas Log Provision	Yes (70,000 BTU max)
Certified in Masonry:	NO
Shipping Weight :	720 pounds

Rumford 1000C Fireplace Price List - Tariffs included in the prices

PRODUCT CODE	DESCRIPTION	SUGGESTED RETAIL
EF-RR1000C	Rumford 1000C Fireplace - Body only c/w guillotine door and screen. Requires 1 choice of Firebox Lining	**9,275.00**

RUMFORD 1000C FIREBOX LINING

EO-RB1000	Refractory Brick* for RR1000 - Running Bond Pattern	**1,003.00**
EO-VP1000	Vermiculite Panel** for RR1000 - Herringbone Pattern	**1,841.00**

* Maximum Durability
** Lower emissions & faster startup

OPTIONS (see options page for detailed descriptions)

GRAVITY VENTS

FO-INT	Outside Air Kit - 4" Diameter	**184.00**

CHIMNEY

SEE RIS PRICE LIST FOR 10"

Rumford 1500C Fireplace

It is the ultimate in size and performance

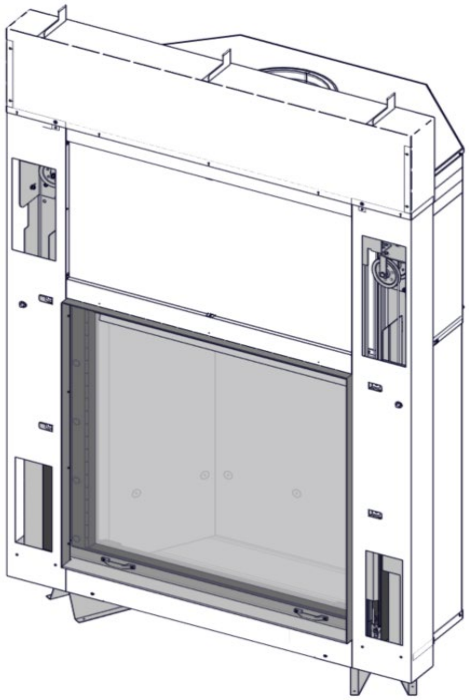

TECHNICAL SPECIFICATIONS

Emissions:	EPA Phase 2 Qualified at 3.4 grams/kg of wood burned EPA Qualified as per test protocol ASTM 2558 “Standard test method for determining particulate matter emissions from fires in low mass wood-burning fireplaces”. The Rumford 1500 can be sold in Canada and the USA since it is not regulated as per the rule definition of “fireplace” under Subpart AAA of the 2015 EPA Standards of Performance for New Residential Wood Heaters Vol. 80, No. 50.
Size of Firebox:	35 1/2" W front 21 3/4"W back 13" deep
Maximum Log Size:	24” maximum. The shape of the Rumford firebox is not square, therefore depending upon where and how you place your logs, different sized pieces may fit. Laid flat, 20″ logs will fit nicely at the front of the firebox, but only 13″ logs will fit at the back. Most people stack the logs upright against the back of the firebox.
Door & Screen	Counterweighted Guillotine System
Glass Viewing Area:	37 1/4"W x 36 1/2"H
Venting :	Certified exclusively with 12" RIS Chimney (12′ minimum, refer to manual if offsets are present)
Gas Log Provision	Yes (100,000 BTU max)
Certified in Masonry:	NO
Shipping Weight:	1085 pounds

Rumford 1500C Fireplace Price List - Tariffs included in the prices

PRODUCT CODE	DESCRIPTION	SUGGESTED RETAIL
EF-RR1500C	Rumford 1500C Fireplace - Body only c/w guillotine door and screen. Requires 1 choice of Firebox Lining	**14,300.00**

RUMFORD 1500C FIREBOX LINING

EO-RB1500	Refractory Brick* for RR1500 - Running Bond Pattern	**1,289.00**
EO-VP1500	Vermiculite Panel** for RR1500 - Herringbone Pattern	**2,393.00**

* Maximum Durability
** Lower emissions & faster startup

OPTIONS (see options page for detailed descriptions)

GRAVITY VENTS

FO-INT	Outside Air Kit - 4" Diameter	**184.00**

CHIMNEY

SEE RIS PRICE LIST FOR 12"

Renaissance Option Descriptions

FIREBOX LINING

Refractory Brick for RR1000 - Running Bond Pattern **EO-RB1000**

Maximum Durability

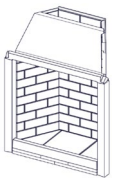

Vermiculite Panel for RR1000 - Herringbone Pattern **EO-VP1000**

Lower emissions & faster startup

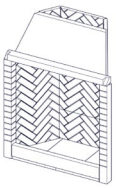

Refractory Brick for RR1500 - Running Bond Pattern **EO-RB1500**

Maximum Durability

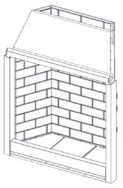

Vermiculite Panel for RR1500 - Herringbone Pattern **EO-VP1500**

Lower emissions & faster startup

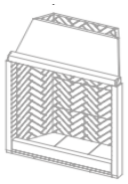

TRIMS & GRILLS

RUP600 Straight Trim (for heavier masonry) **EO-RUPST**

The Straight Trim projects straight out the front opening of the fireplace by ¾" when installed. If the finishing material is thick (e.g. brick, stone, etc.), it will provide a finished edge to butt against.

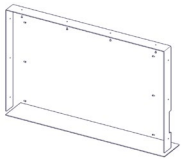

RUP600 Frame Trim (for tile or cement board finish) **EO-RUPFT**

The Frame Trim partially overlaps the wall and covers the edge where the finishing meets the fireplace. It is ideal for installations finished with thin materials (e.g. tile, cement board, etc.).

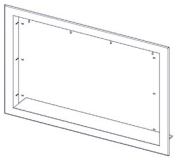

RL50 Long Linear Intake Grill **EO-LLG-IN**

This long air Inlet grill (52½"x 6") replaces the two rectangular air inlet grills provided with the Linear 50.

RL50 Long Linear Outlet Grill **EO-LLG-OUT**

This long air Outlet grill (52½"x 6') replaces the two rectangular Hot Air Outlet grills provided with the Linear 50.

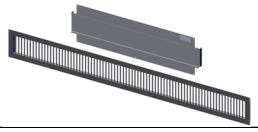

RUP600 Long Linear Intake Grill **EO-08LLG-IN**

This long air Inlet grill (37" x 6") replaces the two rectangular air inlet grills provided with the Uptown.

RUP600 Long Linear Outlet Grill **EO-08LLG-OUT**

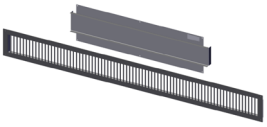

This long air Outlet grill (37" x 6") replaces the two rectangular Hot Air Outlet grills provided with the Uptown.

RL50 Square Grills for 8' Ceiling **EO-SG**

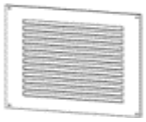

These 13" grills are required for installation in a room with a ceiling between 8' and 9' high. They replace the rectangular hot air outlet grills provided with the Linear Fireplaces. Includes (1) 13" x 13" contemporary grill and screws for installation

HEAT RECOVERY SYSTEM (HRS) OPTIONS

RUP600 8" HRS Duct Extension - 5 Feet **FO-DUCT5**

Provides 5 additional feet of 8" insulated flexible duct to be used with the Uptown 600. Refer to the Uptown 600 installation instructions and respect the maximum duct length of 15 feet in total.

RL50 10" HRS Duct Extension - 5 Feet **EO-DUCT**

Provides 5 additional feet of 10" insulated flexible duct to be used with the Linear 50. Refer to the Linear 50 installation instructions and respect the maximum duct length of 15 feet in total.

MISCELLANEOUS OPTIONS

Masonry Chimney Adapter **FO-FDM8**

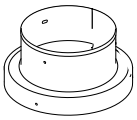

Permits the Uptown 600 to convert to a stainless liner for re-lining a masonry chimney. Attach to the liner with 3 stainless steel rivets (provided) and to the EXCEL chimney with 3 screws (provided).

Outside Air Kit - 4" diameter **FO-INT**

Brings outside combustion air to the fireplace. Includes 10' of 4" diameter insulated aluminum duct and a register for the outside wall. Applicable to all models

UPTOWN 600 FIREPLACE		
Includes a guillotine-style ceramic glass door & firescreen, refractory brick lining, HRS ducts and grills.	**EF-RUP600**	8,675.00
LINEAR 50 FIREPLACE		
Includes a guillotine-style ceramic glass door & firescreen, refractory brick lining, HRS ducts and grills.	**EF-RL50**	12,200.00
RUMFORD 1000C FIREPLACE - Body only		
Body only c/w guillotine door and screen. Requires 1 choice of Firebox Lining	**EF-RR1000C**	9,275.00
RUMFORD 1500C FIREPLACE - Body only		
Body only c/w guillotine door and screen. Requires 1 choice of Firebox Lining	**EF-RR1500C**	14,300.00

FIREPLACE OPTIONS			EF-RUP600	EF-RL50	EF-RR1000C	EF-RR1500C
FIREBOX LINING						
Refractory brick for RR1000C	**EO-RB1000**	1,003.00			X	
Vermiculite panels for RR1000C	**EO-VP1000**	1,841.00			X	
Refractory brick for RR1500C	**EO-RB1500**	1,289.00				X
Vermiculite panels for RR1500C	**EO-VP1500**	2,393.00				X
TRIMS & GRILLS						
Straight Trim (for heavier masonry)	**EO-RUPST**	351.00	X			
Frame Trim (for tile or cement board finish)	**EO-RUPFT**	526.00	X			
Long Linear Intake Grill	**EO-LLG-IN**	369.00		X		
Long Linear Outlet Grill	**EO-LLG-OUT**	281.00		X		
Long Linear Intake Grill	**EO-08LLG-IN**	351.00	X			
Long Linear Outlet Grill	**EO-08LLG-OUT**	263.00	X			
Square Grills for 8' Ceiling	**EO-SG**	272.00		X		
HEAT RECOVERY SYSTEM (HRS) OPTIONS						
RUP600 8" HRS Duct Extension - 5 Feet	**FO-DUCT5**	163.00	X			
RL50 10" HRS Duct Extension - 5 Feet	**EO-DUCT**	272.00		X		
MISCELLANEOUS OPTIONS						
Masonry Chimney Adapter	**FO-FDM8**	154.00	X			
Outside Air Kit - 4" diameter	**FO-INT**	184.00			X	X

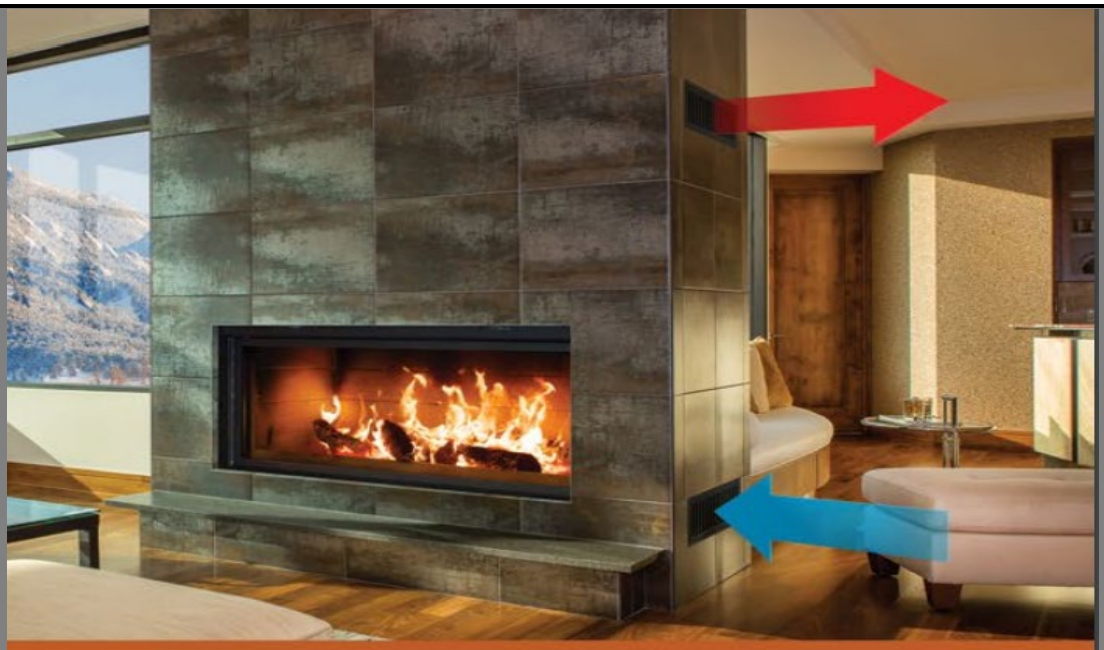

Heat Recovery System (HRS)